CORE VALUES | QUALITY PRODUCTS | SUPERIOR SERVICE

CORE® LIFTING PRODUCTS

WIRE ROPE PULLING HOISTS

CM®

Tiger®

AMH material handling

CoreLifting.com

Specifications for Hoists and Trolleys

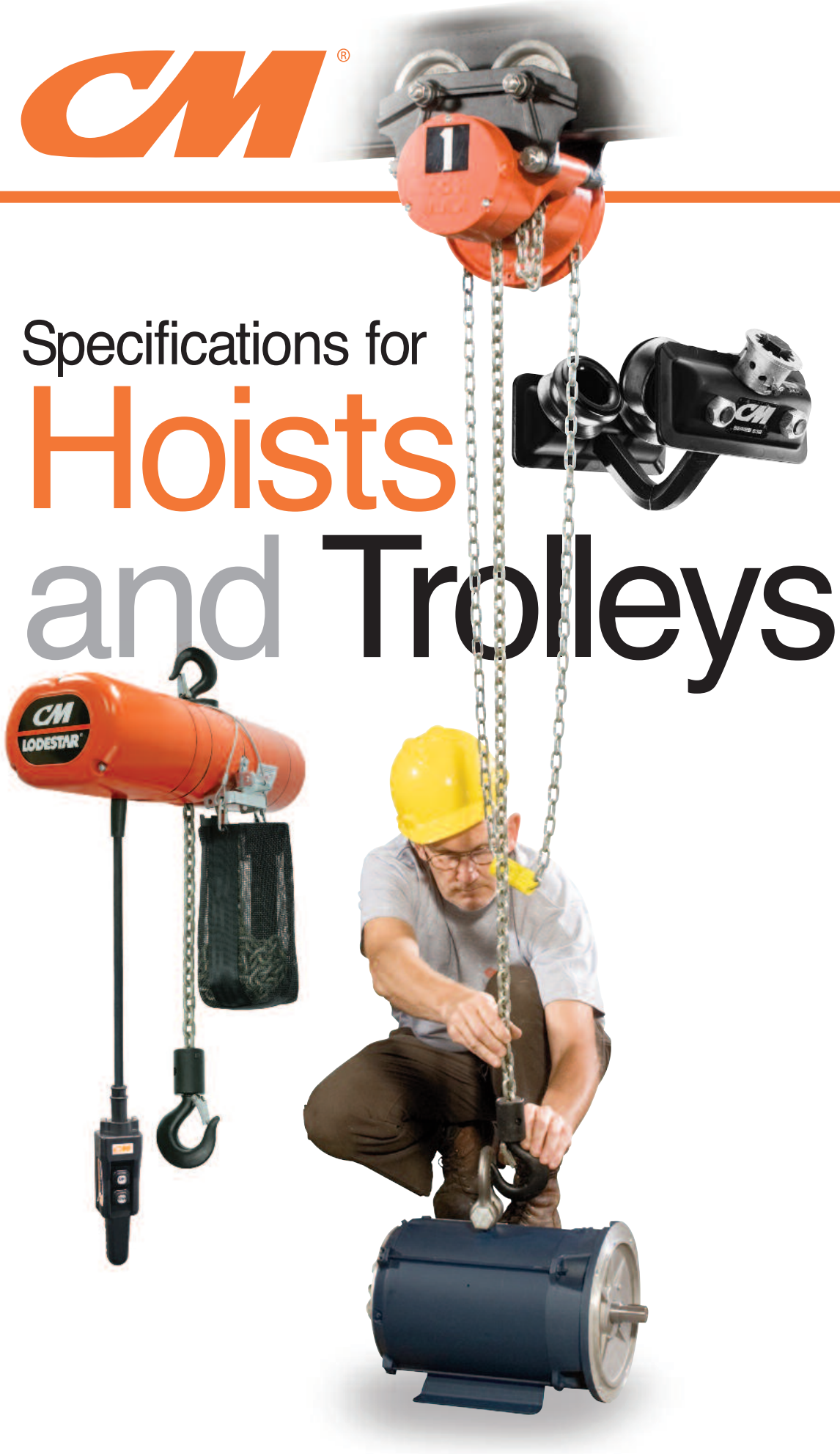

GT Series

Grip and pull wire rope lever tool

The GT Grip and Pull Lever Tool is a rugged and portable unit designed for heavy duty pulling, rigging, dragging, and stretching applications. Its ability to grip and pull heavy loads over long distances specially suit this tool for use in the construction and transportation industries, as well as hundreds of other industrial applications.

- **CAPACITIES & REACH -** Rated loads from 1 to 3 tons, with standard wire rope length of 32 feet on 1 and 3 ton models; 65 feet on 2 ton model.
- **SMOOTH OPERATION / LOW WEAR -** The large surface area of the dual clamping jaws provides an evenly distributed grip on the wire rope for smooth operation and low wear.
- **POSITIVE LOAD CONTROL -** The greater the force of the pull, the greater the clamping force of the jaws. Unique jaw design prevents damage to the wire rope.
- **LIMITLESS WIRE ROPE TRAVEL -** Versatility for use over long distances.
- **DURABILITY -** Lightweight and compact design for portability, yet built tough for long life and trouble free service.
- **OVERLOAD PROTECTION -** Easily replaceable, shear pin design to protect against dangerous overloads.
- **TELESCOPIC HANDLE -** Enhances portability and ease of operation.
- **MINIMAL MAINTENANCE -** Periodic cleaning, inspection, and lubrication is all that is required.
- **LIFETIME WARRANTY -** Lifetime warranty against defects in materials and workmanship. Refer to full CM Warranty Statement for details.

GT-1300-32
1 Ton

GT-2000-65
2 Ton

GT-3500-32
3 Ton

Specifications

Rated Capacity (Tons)	Model Number	Product Code	Standard Wire Rope Length (Ft.)	Wire Rope Diam. (In.)	Lever Length Extended (In.)	Lever Length Retracted (In.)	Rope Advance† (In.)	Overall Dimensions (In.)	Net Weight* (Lb.)	Net Weight** (Lb.)
1	GT-1300-32	0013	32	3/16	29.1	21.3	1.30	19.7 x 9.1 x 4.0	35	18
2	GT-2000-65	0020	65	7/16	29.1	21.3	1.45	24.8 x 13.0 x 5.9	79	40
3	GT-3500-32	0035	32	5/8	29.1	21.3	0.78	28.6 x 12.8 x 7.0	94	66

† Per Full Stroke at Rated Load
* Wire Rope Included
** Less Wire Rope

Product Catalogue

Tiger hoisting, clamping, winching, and height safety ranges

Tiger

V1.1 | 2021 | tigerlifting.com

Wire rope puller

The manual wire rope puller is a hand operated lifting and pulling device. The puller could also be used for lowering, tensioning and guying which makes it a versatile, portable and multipurpose tool.

The principle function of the wire puller is that the rope passes through mechanical jaws rather than being reeled on a drum of a puller or conventional winch.

The tension of the rope is applied by means of two pairs of self-energised jaws which apply a grip onto the wire rope in sections.

The effort is transferred to the jaws by two parallel levers, one for forward operation and the other for reverse operation. A telescopic bar, fitted to either the forward or reverse lever, transmits the effort to the jaw mechanism.

This parallel clamping system provides an evenly distributed grip at a lower force, resulting in less rope wear. The load is held securely at all times.

TRPA (Steel)

TRPA (Aluminium)

- Range from 800kg to 5400kg (Lifting Capacity)
- Lightweight manual pulling machines - simple and safe to operate
- Corrosion free aluminium alloy casing
- Steel versions also available
- Rope clamp system easily disengaged with a lever allowing smooth installation of wire rope
- Individually serial numbered for traceability
- Usable at horizontal, vertical and angled working positions
- Equipped with an anchor bolt offering numerous connection possibilities
- Supplied with relevant certification and user instructions
- Compact high-strength
- 20m steel wire with eye hook as standard
- Overload protection built in, with a shearing pin in the forward lever
- Shear pins can be replaced without removing the load
- Spare shear pins supplied
- Parallel clamping system providing evenly distributed grip at a lower force, resulting in less rope wear

Tiger wire rope pulling machines are suitable for pulling, lifting, tensioning and releasing in any direction.

They are available in light and compact aluminium or pressed steel construction for applications where aluminium is not recommended.

The wire rope puller comes with a telescopic operating handle* and 20 metres of wire rope fitted with an eye-type hook as standard. Any length of rope can be supplied to your requirements. Alternatively the wire rope puller is available as a machine only, without wire rope. (*the operating handle with the 800kg TRPA/TRPS is not telescopic)

These units meet and exceed all the requirements within BS EN 13157:2004+A1:2009.

Product Code (ALUMINIUM CASING)	WLL (kg)	Pulling Capacity (kg)	Rope Diameter (mm)	Breaking Strain (kN)	Effort (kg)	Advance/ Pull (mm)	Net Weight (kg)	Overall Length (mm)	Overall Height (mm)	Overall Width (mm)
TRPA-08	800	1200	8.3	43	35	52	6.0	426	235	64
TRPA-16	1600	2400	11	120	41	55	11.0	545	280	97
TRPA-32	3200	4800	16	162	45	28	22.0	660	325	116
TRPA-54	5400	8000	20	264	76	30	59.0	930	480	152

Product Code (STEEL CASING)	WLL (kg)	Pulling Capacity (kg)	Rope Diameter (mm)	Breaking Strain (kN)	Effort (kg)	Advance/ Pull (mm)	Net Weight (kg)	Overall Length (mm)	Overall Height (mm)	Overall Width (mm)
TRPS-08	800	1200	8.3	43	35	52	8.0	440	265	63
TRPS-16	1600	2400	11	120	41	55	14.5	550	300	77
TRPS-32	3200	4800	16	162	45	28	28.0	690	350	91

Increase the pulling and lifting capacity:

Various methods of rigging are shown. For the correct and incorrect method refer to figures 1 and 2. Other methods of rigging will increase the capacity of the machine – refer to figures 3 and 4.

In examples 3 and 4 the maximum working load limit (WLL) of the pulley and anchor point shall be equal to or greater than two times the WLL.

NOTE: When the wire rope puller is anchored directly to a fixed point, ensure that there are no obstructions around the machine which could prevent the wire rope, puller and anchor from operating in a straight line.

It is recommended to use a sling of similar capacity between the anchor point and the unit.

WARNING: Any rigging configuration which requires the calculation of forces applied should be checked by a competent engineer, with special attention to the strength of the fixed point used.

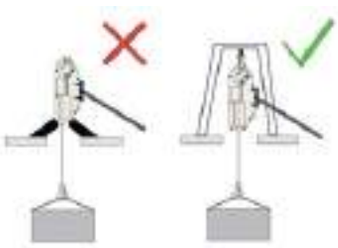

Figure 1 Figure 2

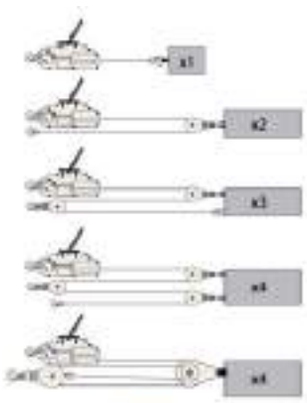

Figure 3

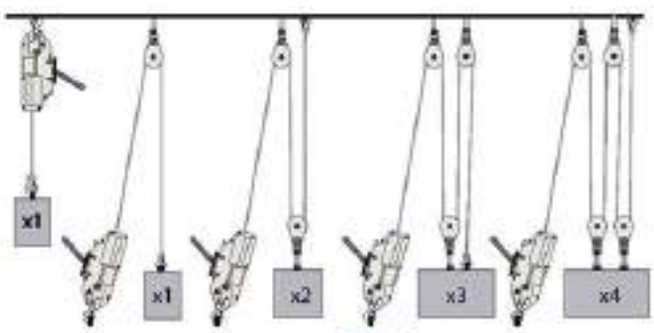

Figure 4

Product Catalog #20

AMH™

ALL MATERIAL HANDLING

Lifting Equipment

Walk-E-Dog™

Wire Rope Pulling Hoist

2000, 4000 & 8000 Lb WLL

FEATURES

- Portable lightweight aluminum construction is durable and resists corrosion.
- ANY length of commercially available 6x19S IWRC wire rope can be used for unlimited reach. (contact us for further details)
- Smooth operation with precise control.
- Telescoping handle allows the operator to optimize pull and stroke.
- Long service life and low maintenance requiring only periodic cleaning, lubrication and inspection.
- Overload protection is provided by a shear pin that is easily replaced. 4 extra shear pins are supplied in the lever grip or carrying handle compartments.
- Meets ASME/ANSI B30.21, OSHA and NASA-STD-8719.9 for manually lifting with a 4:1 SF
- ATEX rated Ⓔx II 3 GD c IIB 54° C X for limited use in hazardous environments.
- 66 ft. wire rope may be ordered separately.

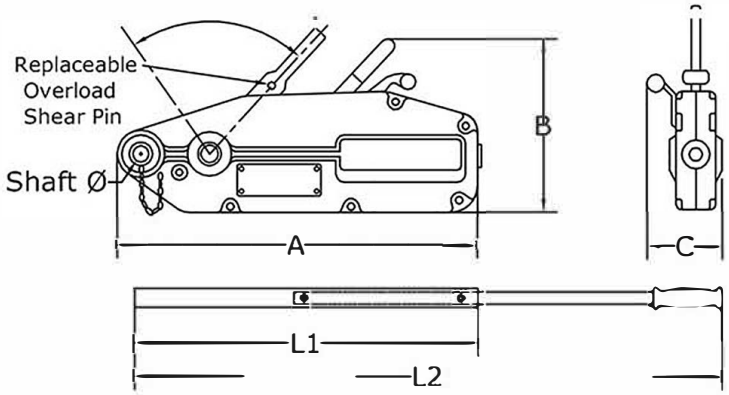

6X19S Wire Rope Assembly
(Must be ordered separately)

Part #	Size	Weight	Length
WD05RA66	5/16"	15 Lbs	66 Ft
WD07RA66	7/16"	28 Lbs	66 Ft
WD10RA66	5/8"	41 Lbs	66 Ft

Walk-e-Dog Model	Wire Rope	ANSI/ASME B30.21 OSHA & NASA		Weight Lbs.	A	B	C	Shaft Ø	L1	L2	Advance /Stroke	Hand Pull @WLL
		WLL @ 4:1	SF									
WD05	5/16"	2000 lbs	1T	13.2	17.4"	9.6"	2.6"	0.88"	-----	32.7"	2.1"	76 lbs
WD07	7/16"	4000 lbs	2T	24.2	22.2"	11.4"	4.0"	1.00"	32.7"	49.0"	2.3"	88 lbs
WD10	5/8"	8000 lbs	4T	48.4	26.9"	13.3"	4.7"	1.20"	32.7"	49.0"	1.1"	97 lbs

Before using these products; read and follow instructions in the operator's manual. Never exceed capacity. Do not use for lifting people or loads over people.